Miele

Operating and installation instructions

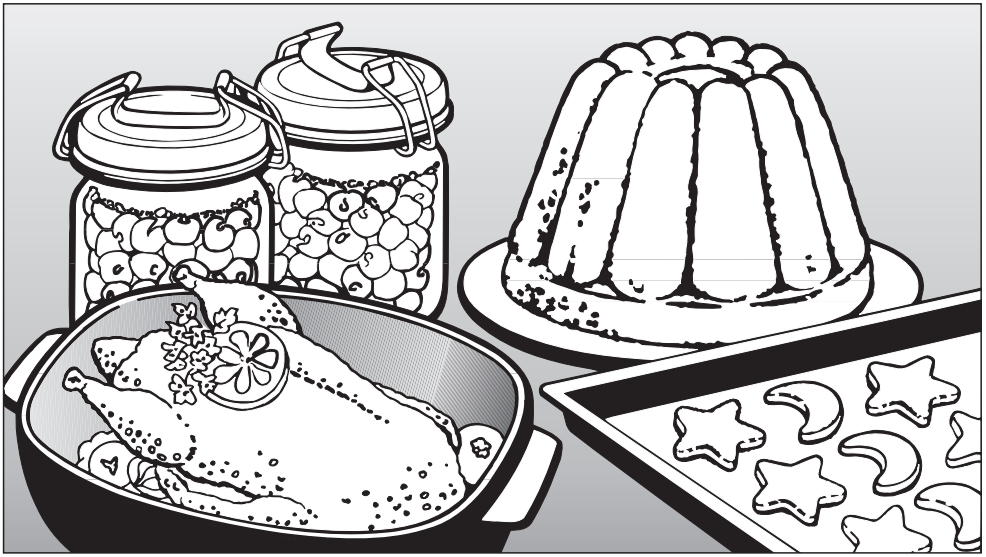

Oven
H 4700 B, H 4710 B
H 4800 B, H 4810 B

To avoid the risk of accidents or damage to the appliance, it is **essential** to read these instructions before it is installed and used for the first time.

en - AU, NZ

M.-Nr. 07 856 420

Contents

Warning and Safety instructions 6
Caring for the environment 11
Description of the appliance 12
H 4700 B, H 4710 B, H 4800 B, H 4810 B 12
Features 13
Oven controls 13
Safety features 13
Cooling fan 13
Vented oven door 13
Energy-saving features 13
Rapid heat-up function 13
PerfectClean treated surfaces 13
Catalytic enamelled surfaces 13
Accessories 14
Baking tray, universal tray and rack with anti-tip safety notches 14
FlexiClip telescopic runners 15
Fitting the FlexiClip telescopic runners 15
Remove FlexiClip telescopic runners 16
Oven controls 17
Function selector 17
Temperature selector 17
Temperature indicator light 🌡 17
Functions 18
Before using for the first time 20
To set the time of day for the first time 20
Cleaning and heating up for the first time 20
Clock timer 22
Sensors 22
Operation 22
Time displays 23
Changing the time of day 23
To change the audible tone 24
Using the minute minder 🔔 function 24
To set the minute minder 25
To change the time set for the minute minder 25
To cancel the time set for the minute minder 25

Contents

Operation . . . 26
Using the oven . . . 26
Pre-heating . . . 26
Switching on and off automatically . . . 27
Entering a cooking duration . . . 27
To enter the duration and finish time . . . 28
At the end of the duration . . . 29
To check and change the duration . . . 29
To delete the duration . . . 29
Baking tips . . . 30
Bakeware . . . 30
Baking paper . . . 30
Universal tray . . . 30
Retangular tins . . . 30
Notes about the charts . . . 31
Temperature, baking duration . . . 31
Shelf level . . . 31
Frozen food . . . 31
Baking chart . . . 32
Fan Plus . . . 32
Conventional . . . 33
Intensive Bake . . . 34
Roasting tips . . . 35
Useful tips . . . 36
Roasting chart . . . 37
Notes on low temperature cooking . . . 38
Procedure for low temperature cooking . . . 38
Cooking times/Core temperatures . . . 39
Grilling tips . . . 40
Preparing food for grilling . . . 42
Grilling . . . 42
Useful tips . . . 42
Fan Grilling guide (Fan Grill) . . . 43
Grilling guide (Grill / Economy Grill) . . . 44
Defrost . . . 45
Bottling . . . 46

Cooking ready meals 47
Cleaning and care 48
Appliance front 48
Accessories 49
Baking tray, universal tray, anti-splash insert 49
Rack, runners 49
FlexiClip telescopic runners 49
Lubricating the FlexiClip telescopic runners 50
Oven interior 51
Seal and inside of the oven door 51
PerfectClean 52
Catalytic enamel surfaces 54
To remove the oven door 55
To dismantle the oven door 56
To refit the door 58
To remove the FlexiClip telescopic runners 59
To remove the shelf runners 59
To remove the back panel 60
To lower the top heat/grill element 60
Problem solving guide 61
After sales service and warranty 63
Optional accessories 64
Electrical connection 66
Building-in diagrams 67
Appliance dimensions and unit cut-out 67
Front dimensions 68
Installing the oven 69

This appliance conforms to current safety requirements. Inappropriate use can, however, lead to personal injury and damage to property.

To avoid the risk of accidents and damage to the appliance, please read these instructions carefully before using it for the first time. They contain important notes on installation, safety, use and maintenance.

Keep these instructions in a safe place and ensure that new users are familiar with the content. Pass them on to any future owner.

Correct application

▶ This oven is designed for domestic use and for use in similar environments by guests in hotel or motel rooms, bed & breakfasts and other typical living quarters. This does not include common/shared facilities or commercial facilities within hotels, motels or bed & breakfasts.

▶ This oven is designed to bake, roast, grill, cook, defrost, dry fruit etc. Any other usage is at the owner's risk. Miele cannot be held liable for damage resulting from incorrect or improper use or operation.

▶ This oven is not intended for use by persons (including children) with reduced physical, sensory or mental capabilities, or lack of experience and knowledge, unless they are supervised whilst using it or have been given instruction concerning its use by a person responsible for their safety.

Safety with children

▶ This appliance is not a toy! To prevent the risk of injury or damage, do not let children play with the appliance or its controls.

▶ Older children may only use the oven when its operation has been clearly explained to them and they are able to use it safely, recognising the dangers of misuse.

▶ Great care should be taken to ensure that children do not touch the appliance when it is being used. Children's skin is far more sensitive to high temperatures than that of adults. External parts of the oven such as the door glass, control panel and the vent become quite hot.

▶ Warning
To avoid burns, young children should be kept away.

Technical safety

▶ Installation, maintenance and repairs may only be carried out by a suitably qualified and competent person in strict accordance with current national and local safety regulations. Repairs and other work by unqualified persons could be dangerous. The manufacturer cannot be held liable for unauthorised work.

▶ Before installation, check the appliance for visible signs of damage. Do not install and use a damaged appliance. A damaged appliance could be dangerous.

▶ The electrical safety of this appliance can only be guaranteed when continuity is complete between it and an effective earthing system. It is most important that this basic safety requirement is present and tested regularly and, where there is any doubt, the household wiring system should be inspected by a qualified electrician. The manufacturer cannot be held liable for the consequences of an inadequate earthing system (e.g. electric shock).

▶ Before connecting the appliance, make sure that the connection data on the data plate (voltage and connected load) match the mains electricity supply.
This data must correspond in order to avoid the risk of damage to the appliance. Consult a competent person if in doubt.

▶ Do not connect the appliance to the mains electricity supply by a multi-socket unit or an extension lead. These do not guarantee the required safety of the appliance (e.g. danger of overheating).

▶ For safety reasons, this appliance may only be used when it has been built in.

▶ Never open the housing of the appliance.
Tampering with electrical connections or components and mechanical parts is highly dangerous to the user and can cause operational faults.

▶ While the appliance is under guarantee, repairs should only be undertaken by a service technician authorised by the manufacturer. Otherwise the warranty will be invalidated.

▶ During installation, maintenance and repair work, the appliance must be disconnected from the mains electricity supply. It is only completely isolated from the electricity supply when:

– the mains fuse is disconnected,

– the screw-out fuse is removed (in countries where this is applicable),

– it is switched off at the isolator.

Ensure that current is not supplied to the appliance until after maintenance or repair work has been carried out.

▶ Faulty components must only be replaced by genuine Miele original spare parts. The manufacturer can only guarantee the safety of the appliance when Miele replacement parts are used.

▶ If the supply cord is damaged, it must be replaced by a Miele approved service technician to avoid a hazard.

▶ This appliance may only be used in mobile installations such as ships, caravans, aircraft etc. if a risk assessment of the installation has been carried out by a suitably qualified engineer.

▶ In areas which may be subject to infestation by cockroaches or other vermin, pay particular attention to keeping the appliance and its surroundings in a clean condition at all times. Any damage which may be caused by cockroaches or other vermin will not be covered by the warranty.

Correct use

Caution. Danger of burning.
High temperatures are produced by the oven and the appliance becomes hot. Care should be taken to avoid touching heating elements inside the oven.

▶ Use oven gloves when placing food in the oven, turning or removing it and when adjusting oven shelves etc. in a hot oven. Be very careful that you do not burn yourself on the top heating / grill element.

▶ Never leave the appliance unattended when cooking with oil or fats, as these are a fire hazard if allowed to overheat.

▶ Do not exceed the recommended grilling times when using the "Grill", "Economy Grill" and "Fan Grill" functions. Excessively long grilling times can lead to food drying out and burning, or could even cause it to catch fire.

▶ Do not use the "Grill", "Economy Grill" or "Fan Grill" to finish baking part-cooked rolls or bread or to dry flowers or herbs. Fire hazard.
Use "Fan Plus" or "Conventional" instead.

▶ If using alcohol in your recipes, high temperatures can cause the alcohol to vaporise and even to ignite on the hot heating elements.
Alcohol should be burnt off before the dish is placed in the oven to avoid this danger.

▶ Cover any food which is left in the oven to be kept hot. Any moisture in the food could lead to corrosion damage in the oven. This also prevents the food from drying out.

▶ If you wish to complete a cooking process using the residual heat in the oven, leave the function selector at the position set and turn the temperature selector to the lowest setting. Do not switch the appliance off until the food has been removed. Increased moisture in the oven could cause condensation to form which could lead to

– corrosion in the oven compartment.

– damage to the control panel, worktop and surrounding kitchen furniture.

▶ Do not line the floor of the oven with aluminium foil when using "Conventional"/"Bottom Heat"/ "Intensive Bake"/"Rapid Heat-up". This would cause a build-up of heat which could cause damage to the floor of the oven.
For this reason, do not place a dish, tin or baking tray directly on the oven floor.

If using a tray made by a different manufacturer, make sure that there is a gap of at least 6 cm between the bottom of the tray and the floor of the oven.

▶ Never add cold water to food on a hot universal tray or baking tray or directly onto food in a hot oven. The steam created could cause serious burns or scalding and the sudden change in temperature can damage the enamel.

▶ Always ensure that food is suitably cooked or reheated.
Some foods may contain micro-organisms which are only destroyed by thorough cooking at temperatures over 70 °C for a minimum of 10 minutes. Therefore when cooking or reheating foods, e.g. poultry, it is particularly important that food is fully cooked through. If in doubt, select a longer cooking or reheating time.
It is important that the heat is allowed to spread evenly throughout the food being cooked. This can be achieved by stirring and/or turning the food during cooking.

▶ If using plastic containers for cooking, they must be declared by the manufacturer as being suitable for use in an oven. Other types of plastic containers melt at high temperatures, and could damage the oven.

▶ Do not heat up unopened tins or jars of food in the oven. Pressure can build up and they may explode, resulting in injury or damage.

▶ Do not push pots and pans around on the oven floor, as this could damage the surface.

▶ Do not lean or sit on an open oven door, or place heavy items on it. Make sure that nothing gets trapped between the door and the oven compartment. This could damage the oven.
The oven door can support a maximum load of 15 kg.

▶ Do not use the appliance to heat up the room. Due to the high temperatures radiated, objects near the appliance could catch fire.

Accessories

▶ Only use genuine Miele spare parts and accessories with this appliance. If spare parts or accessories from other manufacturers are used, this will invalidate the warranty, and Miele cannot accept liability.

The manufacturer cannot be held liable for damage caused by non-compliance with these Warning and Safety instructions.

Disposal of the packing material

The transport and protective packing has been selected from materials which are environmentally friendly for disposal and can normally be recycled.

Ensure that any plastic wrappings, bags, etc. are disposed of safely and kept out of the reach of babies and young children. Danger of suffocation.

Rather than just throwing these materials away, please ensure they are offered for recycling.

Disposal of your old appliance or machine

Electrical and electronic appliances / machines often contain materials which, if handled or disposed of incorrectly, could be potentially hazardous to human health and to the environment. They are, however, essential for the correct functioning of your appliance or machine. Therefore, please do not dispose of your old machine or appliance with your household waste.

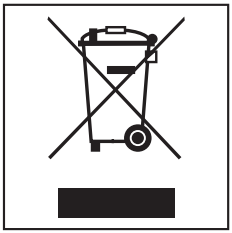

Please dispose of it at your local community waste collection / recycling centre and ensure that it presents no danger to children while being stored for disposal.

It should be unplugged or disconnected from the mains electricity supply by a competent person.
The plug must be rendered useless and the cable cut off directly behind the appliance or the machine to prevent misuse.

H 4700 B, H 4710 B, H 4800 B, H 4810 B

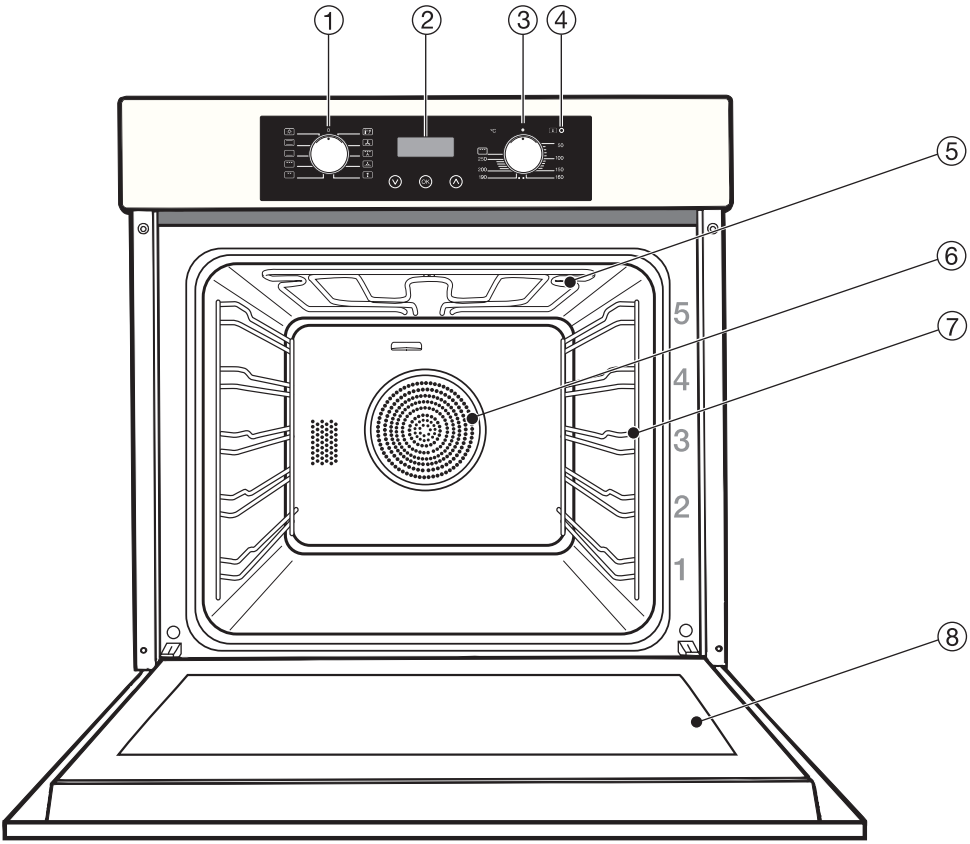

① Function selector *, retractable when it is at "0"
② Clock timer with sensors ∨, OK, ∧ *
③ Temperature selector *, retractable when it is at "0"
④ Temperature indicator light [🌡]
⑤ Top heat/grill element
⑥ Catalytic coated back panel with air inlet for the fan
⑦ Runners with five shelf levels
⑧ Door

* not available in H 4700 B and H 4800 B

Oven controls

In addition to operating the various cooking programmes to bake, roast and grill, the controls also offer the following:
- a time of day display,
- a minute minder,
- a timer to automatically switch cooking programmes on and off,
- settings that can be customised.

Safety features

Cooling fan

A cooling fan will come on automatically when a cooking programme is started. The cooling fan mixes hot air from the oven cavity with cool room air before venting it out into the kitchen through vents located between the appliance door and the control panel.

The cooling fan will continue to run for a while after the oven has been switched off to prevent any humidity building up in the oven, on the control panel or in the oven housing unit.
When the temperature in the oven has fallen sufficiently, the cooling fan will switch off automatically.

Vented oven door

The oven door is an open system and the door panes have a heat-reflecting coating.
During operation, cool air is passed through the oven door to keep the outer pane cool.

If necessary, the oven door can be dismantled for cleaning.

See "Cleaning and care" for more information.

Energy-saving features

Rapid heat-up function

To minimise the time it takes to heat up the oven interior, you can utilise the Rapid heat-up function.

However, pre-heating the oven is only required for select applications. Please refer to cooking instructions or separate User instructions (if available).

PerfectClean treated surfaces

The following surfaces have been treated with PerfectClean enamel:
- Oven interior
- Universal tray
- Baking tray (if available)
- Anti-splash insert (if available)

PerfectClean enamelled surfaces have very good anti-stick properties and are much easier to keep clean than conventional enamel, if cleaned regularly.

See "Cleaning and care" for more information.

Catalytic enamelled surfaces

The back panel is coated with dark grey catalytic enamel. Soiling from oil and fat is burnt off this surface when very high temperatures are used in the oven.

See "Cleaning and care" for more information.

Accessories

Depending on the model, your appliance is delivered with some of the following accessories.

These and other accessories are also available to order from Miele, your Chartered Agent or via the internet on www.miele-shop.com (depending on country).

Baking tray, universal tray and rack with anti-tip safety notches

(depending on model)

Baking tray

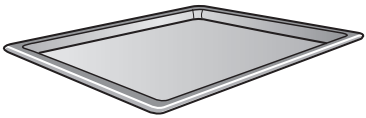

Universal tray

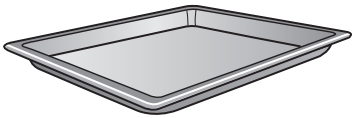

Rack

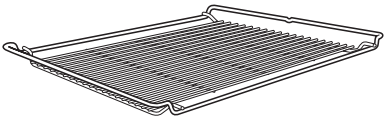

The baking tray, universal tray and rack are inserted into the oven between the two rails of a shelf runner.

The short sides of the tray and rack have a groove in the middle. The non-tip safety notch prevents the trays and rack from slipping out of a shelf when they only need to be partially pulled out.
The trays and rack can then only be taken out of the oven by raising them upwards and then pulling them out.

Always insert the rack in the shelf with the groove on the sides facing downwards.

If you are using a tray with the rack on top, insert the tray between the rails of a shelf runner and the rack will sit on top of it.

Anti-splash insert

(depending on model)

The anti-splash insert should be placed in the universal tray when grilling or roasting.
The juices from the food being cooked collect under the anti-splash tray. This prevents them from spitting and making the oven dirty. The juices can then be used for making gravy and sauces.

FlexiClip telescopic runners

(depending on model)

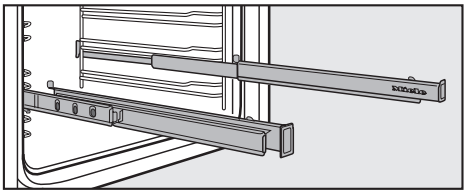

The FlexiClip telescopic runners can be clipped into any of the existing shelf runners and pulled out of the oven to their fullest extent.

Push the telescopic runners right in before placing a tray or rack on them.

To prevent the risk of a rack or tray sliding off the runners, make sure that they are sitting securely on their runners in between the stoppers at either end of each runner.

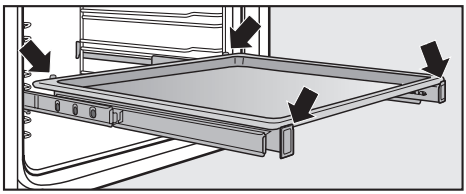

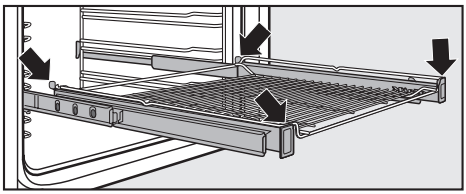

The maximum load for the runners is 15 kg.

Fitting the FlexiClip telescopic runners

⚠ Danger of burning
The oven interior needs to have cooled down before you start handling anything inside it.

The telescopic runners are fitted in between the two rails that make up a shelf level.
The telescopic runner with the Miele logo is fitted on the right.

When fitting the telescopic runners, **do not** extend them.

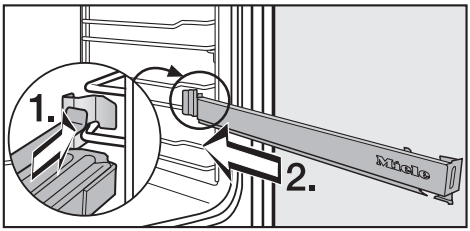

- Fit the telescopic runner in between the two rails at the front (1) and then push it into the oven compartment (2).

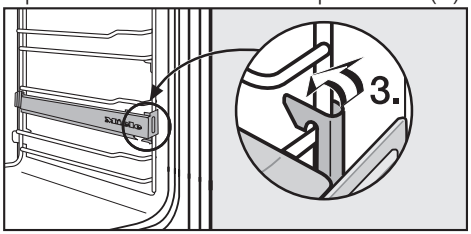

- Then secure the telescopic runner to the bottom of the two rails as illustrated (3).

If the telescopic runners are difficult to pull out after fitting, you may need to pull firmly on them once to release them.

Remove FlexiClip telescopic runners

⚠ Danger of burning
The oven interior needs to have cooled down before you start handling anything inside it.

To remove a FlexiClip runner so that you can clip it into another shelf runner, for example,

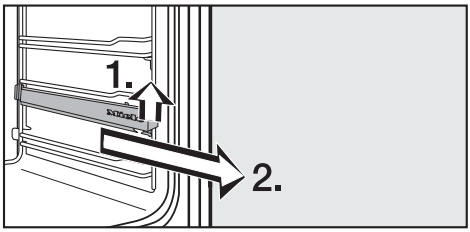

- lift it at the front and then pull it out along the rail of the oven shelf runner.
- Clip it to the required shelf level, see "Features - Fitting the FlexiClip telescopic runners".

Function selector

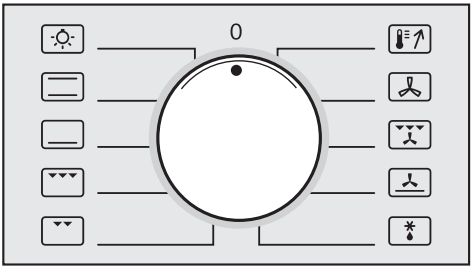

The left-hand control is used to select the function.
It can be turned clockwise or anti-clockwise.
The function selector can only be retracted when it is at "0".

- Rapid Heat-up
- Fan Plus
- Fan Grill
- Intensive Bake
- Defrost
- Conventional
- Bottom Heat
- Grill
- Economy Grill
- Lighting:
  The oven lighting can be switched on separately, e.g. for cleaning.

Temperature selector

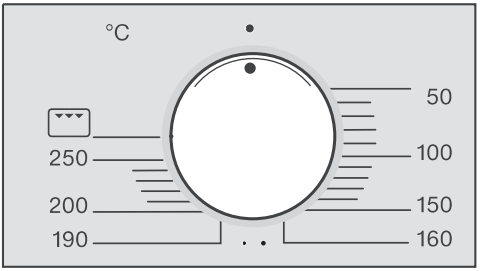

The right-hand control is used to select the temperature.
It can be turned clockwise as far as it will go and back again.
The temperature selector can only be retracted when it is at "0".

Temperature indicator light

The temperature indicator light is located next to the temperature selector.
The indicator light is always on when the heating is on.

When the set temperature is reached,
- the oven heating switches off.
- the temperature indicator light goes out.

However, if the temperature falls below the set temperature, the oven heating and the temperature indicator light will switch on again.

Functions

Your oven has a range of oven functions for preparing a wide variety of recipes.

The oven has the following functions:
Ⓐ Top heat/grill element (underneath the roof of the oven)
Ⓑ Bottom heat element (underneath the oven floor)
Ⓒ Ring heating element (behind the air inlet for the fan)
Ⓓ Fan (behind the air inlet for the fan)

Depending on the function, these components will be combined differently, see information in [ ].

Functions	Notes
Conventional [Ⓐ + Ⓑ]	– For baking and cooking traditional recipes, e.g. fruit cake, casseroles. – Also ideal for soufflés. – If using an older recipe or cookbook, set the oven temperature for Conventional 10 °C lower than that recommended. The cooking duration does not need to be changed.
Bottom Heat [Ⓑ]	– Use this setting towards the end of baking to reheat or brown the base of a cake, quiche or pizza.
Grill [Ⓐ]	– The grill is ready for use when it glows red. – For grilling larger quantities of thin cuts (e.g. steaks). – For browning larger dishes.
Economy Grill [Ⓐ]	– The inner element of the grill is ready for use when it glows red. – For grilling small quantities of thin cuts (e.g. steaks) – For browning smaller dishes.

Functions	Notes
Rapid Heat-up [Ⓐ + Ⓒ + Ⓓ]	– For pre-heating the oven compartment. The oven function required must then be selected.
Fan Plus [Ⓒ + Ⓓ]	– For baking and roasting. – You can bake and roast on different levels at the same time. – Lower temperatures can be used than with "Conventional " as the Fan Plus system distributes the heated air around the food.
Fan Grill [Ⓐ + Ⓓ]	– The heating elements and fan are switched on alternately. – For grilling larger items, e.g. rolled meat, poultry. – The hot air from the grill is distributed over the food by the fan. This enables a lower temperature to be selected than when using "Grill "/"Economy Grill ".
Intensive Bake [Ⓑ + Ⓒ + Ⓓ]	– For cooking dishes which require a moist topping and a crisp base such as pizza and quiche lorraine. – Intensive Bake is not suitable for baking thin biscuits etc. or for roasting as the juices will become too dark.
Defrost [Ⓓ]	– For the gentle defrosting of frozen food.

Before the oven can be used, you will need to
- release the controls by pressing them in if they are pushed in when the oven is delivered.
- set the time of day on ovens with a clock timer.

To set the time of day for the first time

The clock timer has a 24-hour clock.

After connecting the appliance, ● lights up and 0 00 starts flashing.

■ Touch the OK sensor.

0 00 lights up in the display and ● flashes.

■ While ● is flashing in the display, enter the time of day with the ∨ or ∧ sensor.

■ Touch the OK sensor.

The time of day is now registered and ● lights up.

The time of day operates in minute units.

Cleaning and heating up for the first time

Before use, please remove
- any stickers from the floor of the oven.
- any protective foil from the oven front.

See "Cleaning and care" for more information.

Before using the oven for the first time,

- take **all accessories** out of the oven and wash them.
- then **heat the oven up once with nothing in it**. New ovens can give off a slight smell on first use. Doing this will dissipate the smells before you use it to cook food.

■ Wipe out the interior with a damp cloth to remove any dust or bits of packaging that may have accumulated in the oven compartment during storage and unpacking.

■ Press in the function selector and the temperature selector to release them.

■ Use the function selector to select Fan Plus [⅄].

■ Use the temperature selector to set the highest temperature (250 °C).

The oven will start heating up as soon as this entry has been accepted.

- Heat up the empty appliance for at least an hour.

Please ensure the room is well ventilated during this operation. Close doors to other rooms to prevent the smell spreading throughout the house.

The timer can also be used to set the finish time. See "Entering a cooking duration".

- Leave the appliance to cool down to room temperature.
- Then wipe the oven interior out with a solution of hot water and a mild detergent and dry it thoroughly with a soft clean cloth.

Leave the oven door open until the oven interior is completely dry.

Clock timer

The clock timer (model dependent)

- displays the time of day.
- can be used as a minute minder.
- can automatically switch the oven off or on/off.

Sensors

The sensors underneath the display react to touch.
A keypad tone sounds each time a sensor is touched.

Operation

Operation of the clock timer is done via the OK, ∧ and ∨ **sensors** and the **display**.

Sensor	Use
OK	– Calling up the minute minder 🔔 – Calling up the duration – Calling up the finish – To save entries
∨ and ∧ simultaneously	– Calling up the time of day ● – To delete times
∧	– To increase times – To change the audible tone
∨	– To reduce times – To call up the audible tone – To change the audible tone

If you call up a function, the relevant symbol (△, ⏲, ⏲ oder ●) will flash in the display.

> You can enter the time only as long as the symbol flashes (approx. 15 seconds).
> If the symbol has stopping flashing, you will need to call it up again with the OK sensor.

Times are changed by the minute with each touch of the ∨ or ∧ sensors. Touching the sensor for longer speeds up the change in the display.

Press the OK sensor to save or wait approx. 15 seconds.

After this time, your entry will be automatically registered and the symbol will light up.

Time displays

If a minute minder is entered, its progress will be shown first.

If the duration ⏲ and finish ⏲ functions are entered, the time of day will be shown first. The ⏲" and "⏲ symbols indicate the entered times. Times can be called up by pressing the OK sensor.

Changing the time of day

The clock timer has a 24-hour clock.

> The time of day can only be changed if a cooking time (duration ⏲/finish ⏲) hasn't been entered.

- Press the ∨ and ∧ sensors simultaneously.
- While ● is flashing in the display, enter the time of day with the ∨ or ∧ sensor.
- Touch the OK sensor.

The time of day is now registered and ● lights up.

After a power cut, the time of day needs to be re-entered.

To change the audible tone

You can choose between different tones.

- Press the ∨ sensor until S and a number appear in the display, e.g.

The audible tone for this combination will sound at the same time.

With each touch of the ∨ or the ∧ sensor a new tone will sound.

The options are from S 0 to S 30.

- Touch ∨ or ∧ repeatedly until the required tone sounds.
- Touch the OK sensor to save the selection.

You can also wait for approx. 15 seconds. The tone that sounds at the last touch of the sensor will be saved after this time.

After a power cut, the audible tone will be reset to the factory default setting.

Using the minute minder 🔔 function

The minute minder can be used to time any activity in the kitchen, e.g. boiling eggs.

You can set the minute minder at the same time as another timed programme, e.g. as a reminder to stir a dish or add seasoning etc.

A minute minder time of between 1 minute and 23 hours 59 minutes can be entered.

To set the minute minder

- Press and hold in the OK sensor until the 🔔 symbol starts flashing in the display.

0•00 flashes in the display.

- As long as the 🔔 symbol flashes, enter the minute minder with the ∨ or ∧ sensors.
- Touch the OK sensor.

The entry will be registered.

The 🔔 symbol indicates the minute minder and its progress in the display.

The last minute of the minute minder counts down in seconds.

At the end of the time set for the minute minder

– 🔔 flashes,

– a buzzer will sound for approx. 7 minutes.

- Touch the OK sensor.

The buzzer will stop and the symbols in the display will go out.

To change the time set for the minute minder

- Press and hold in the OK sensor until the 🔔 symbol starts flashing in the display.
- As long as the 🔔 symbol flashes, enter the minute minder with the ∨ or ∧ sensors.

To cancel the time set for the minute minder

- Press and hold in the OK sensor until the 🔔 symbol starts flashing in the display.
- As long as 🔔 flashes, press the ∨ and ∧ sensors simultaneously.

The duration is deleted and the time of day will appear.

Using the oven

- Place the food in the oven.
- Use the function selector to select the required function.

The interior lighting comes on.

- Use the temperature selector to set the required temperature.

The oven heating and cooling fan will switch on.

- At the end of the programme, turn the function and temperature selectors to "0" and remove the food from the oven.

The cooling fan will continue to run for a while after the oven has been switched off to prevent any humidity building up in the oven, on the control panel or in the oven housing unit.
When the temperature in the oven has fallen sufficiently, the cooling fan will switch off automatically.

Pre-heating

Most dishes can be placed in a cold oven. They will then make use of the heat produced during the heating phase.

Pre-heating is only useful in a few cases:

	– for baking dark bread – for roasting beef/fillet
	– for baking cakes/pastries with a short baking time (up to approx. 30 minutes) – for baking sensitive doughs (sponges)

With **Fan Grill**
(see Fan Grilling Guide)

With **Grill** / **Economy Grill**
(see Grilling Guide)

Do not use Rapid Heat-up to pre-heat the oven when baking pizzas or biscuits and small cakes. They will brown too quickly.

To pre-heat the oven:

- Select Rapid Heat-up.
- Select the temperature.

The oven will start to heat up.

- When the temperature indicator light goes out for the first time, set the oven function you require for continued cooking or baking, and place the food in the oven.

Switching on and off automatically

You can programme the oven to switch off automatically or on and off automatically.

To activate **Automatic switch-off**, enter a duration or a duration and finish .

The maximum duration which can be set is 10 hours.

We recommend using automatic switching on and off when roasting. However, do not delay the start for too long when baking as the cake mixture or dough will dry out, and the raising agents will lose their effectiveness.

Entering a cooking duration

By selecting a duration, you can set a programme to switch off automatically.

- Place the food in the oven.
- Select the required function and set the temperature.
- Press and hold in the OK sensor until the symbol starts flashing in the display.

0•00 flashes in the display.

- As long as flashes, enter the duration with the ∧ sensor.

Once the entry has been saved, the time of day will appear in the display. The symbol indicates the duration selected.

To enter the duration and finish time

To use the automatic switching on and off function on the oven, both the cooking duration and the finish time must be entered.

For example:
The time now is 10:45;
you want a dish with a cooking duration of 90 minutes to be ready at 13:30.

- Place the food in the oven.
- Select the required function and set the temperature.

The oven heating, lighting and cooling fan will switch on.

First **enter the cooking duration**:

- Press and hold in the OK sensor until the symbol starts flashing in the display.

0•00 flashes in the display.

- As long as flashes, enter the duration with the ∧ sensor in hours:minutes (1:30) .

Now delay the **finish** time:

- Touch the OK sensor.

In the display:

– 12•15 appears
(time of day plus duration:
10:45 + 1:30 = 12:15).

– the symbol will flash.

- As long as flashes, postpone the end with the ∧ sensor to the required time (13:30).

The oven heating, lighting and cooling fan will switch off.

- Touch the OK sensor.

Once the entry has been saved, the time of day will appear in the display. The " symbols indicate the entered times.

If a minute minder is entered at the same time, this is shown first.

As soon as the start time (13:30 - 1:30 = 12:00) is reached, the oven heating, lighting and cooling fan will switch on.

At the end of the duration

– the oven heating switches off automatically.

– the cooling fan will continue to run for a while.

– a buzzer will sound for approx. 7 minutes.

– will flash.

■ Touch the OK sensor.

The buzzer will stop and the symbols in the display will go out.

> The oven will start heating up again as soon as the OK sensor is pressed. Switch the appliance off if you are no longer using it.

To check and change the duration

■ Press and hold in the OK sensor until the symbol starts flashing in the display.

The duration remaining will be displayed.

■ As long as the flashes, the duration can be changed.

To delete the duration

■ Press and hold in the OK sensor until the symbol starts flashing in the display.

■ As long as flashes, press the ∨ and ∧ sensors simultaneously.

The duration is deleted and the time of day will appear.

> The oven starts heating up as soon as the duration is deleted. Therefore, definitely switch off the appliance if you are no longer using it.

Refer to the baking charts for suggestions of temperatures, shelf levels and cooking durations. These take into account a range of different baking tins, quantities and cooking traditions.

Handling and preparing food correctly is essential for maintaining good health.

Only bake cakes, pizza, chips etc. until they are golden. Do not overcook them.

Bakeware

Please take into account the material of your bakeware in your choice of oven function:

Fan Plus , Intensive Bake

Any heat-resistant material can be used.

Conventional

Dark metal, enamel or aluminium baking tins with a matt finish, as well as heat-resistant glass and ceramic dishes can be used.

Bright, shiny metal tins result in uneven or poor browning and in some cases cakes might not cook properly.

Baking paper

Because of their PerfectClean anti-stick surface, **the baking tray and the universal tray** do not need to be greased or lined with baking paper for baking.
Baked goods are easily removed when done.

Baking paper is only necessary when baking:

- Anything with a **high salt content** (e. g. pretzels, bread sticks), because sodium can damage the PerfectClean surface.
- Meringues or biscuits with **a high egg-white content**, because they are more likely to stick.

Universal tray

When baking cakes with **fresh fruit toppings** and **deep sponge cakes**, place the tin in the universal tray to catch any spillages and keep the oven cleaner.

Retangular tins

Place cakes in retangular tins with the longer side across the width of the oven for optimum heat distribution and even results.

Notes about the charts

Temperature, baking duration

To achieve even results without over-browning the food,

- always select the **lowest temperature** given in the chart.
  Do not set a temperature higher than that recommended. Increasing the temperature may reduce the cooking time, but will lead to uneven browning, and unsatisfactory cooking results.
- Check if the food is cooked at the end of the **shortest time quoted**.
  To check if a cake is ready, insert a wooden skewer into the centre.
  It is ready if the skewer comes out clean, without dough or crumbs sticking to it.

Shelf level

The shelf levels are counted from the bottom of the oven upwards
(1 = lowest, 5 = highest).

	Number of trays	Shelf level
	1	2
	2	1 and 3
	3	1, 3 and 5 *
	1	1 or 2
	1	1 or 2

* When baking moist cakes, bread etc., do not use more than two baking tins at the same time.

If you are using the universal tray and baking trays for baking on more than one shelf level at the same time, the universal tray should be placed below the baking trays.

Frozen food

When baking frozen products such as **cakes, pizza and baguettes**, use the lowest temperature quoted on the manufacturer's packaging. Bake on a layer of baking paper placed on the rack. Cooking large frozen items on the baking tray or the universal tray can cause the metal to distort. This distortion would increase with subsequent use.

Small items of frozen food such as **oven chips or potato croquettes** can be cooked on the universal tray. Place them on baking paper and select the lowest temperature quoted on the manufacturer's packaging. Turn several times during cooking.

Baking chart

Fan Plus

Cakes / biscuits	Temperature in °C	Recommended shelf level	Duration[1] in min.
Creamed mixture			
Sponge cake	150 – 170	2	60 – 70
Ring cake	150 – 170	2	65 – 80
Foam cake (tray)	150 – 170	2	25 – 40
Marble, nut cake (tin)	150 – 170	2	60 – 80
Fresh fruit cake with filling (tray)	150 – 170	2	45 – 50
Fresh fruit cake (tray)	150 – 170	2	35 – 55
Fresh fruit cake (tin)	150 – 170	2	55 – 65
Flan base [3]	150 – 170	2	25 – 30
Small cakes/biscuits[3] (tray)	150 – 170	1, 3 [4]	20 – 25
Sponge mix[3]			
Sponge cake (3 to 6 eggs)[3]	160 – 180	2	25 – 35
Sponge cake (2 eggs)[3]	160 – 180	2	20 – 25
Swiss roll[2]	160 – 180	2	20 – 25
Rubbed in mixture			
Tart / flan base	150 – 170	2	20 – 25
Streusel cake	150 – 170	2	45 – 55
Small cakes/biscuits[3] (tray)	150 – 170	1, 3 [4]	15 – 25
Cheese cake	150 – 170	2	70 – 90
Apple pie	150 – 170	2	50 – 70
Apricot tart with topping	150 – 170	2	55 – 75
Swiss apple pie[2]	190 – 210	2	25 – 35
Yeast mixture / quark dough			
To prove dough	30 – 50	Oven floor [5]	15 – 30
Guglhupf	150 – 170	2	50 – 60
Streusel cake	150 – 170	2	35 – 45
Fresh fruit cake (tray)	160 – 180	2	40 – 50
White bread	160 – 180	2	40 – 50
Wholegrain bread [2]	170 – 190	2	50 – 60
Pizza (tray) [3]	170 – 190	2	35 – 45
Onion tart	170 – 190	2	35 – 45
Apple turnvovers	150 – 170	1, 3 [4]	25 – 30
Choux pastry [3], Eclairs	160 – 180	1, 3 [4]	30 – 40
Puff pastry	170 – 190	1, 3 [4]	20 – 25
Meringues, Macaroons	120 – 140	1, 3 [4]	25 – 50

1) Unless otherwise stated, the times given are for an oven which has not been pre-heated. With a pre-heated oven, shorten times by up to 10 minutes.
2) Pre-heat the oven.
3) Switch Rapid Heat-up off during the heating-up phase.
4) Take baking trays out of the oven early if the food is sufficiently browned before the specified time has elapsed.
5) Place the rack on the floor of the oven, and stand the bowl containing the dough on the rack.

In general, if a range of temperatures/times is given, it is best to select a lower temperature and to check the food after the shortest time.

Conventional

Cakes / biscuits	Temperature in °C	Recommended shelf level	Duration[1] in min.
Creamed mixture			
Sponge cake	150 – 170	2	60 – 70
Ring cake	170 – 190	2	65 – 80
Foam cake (tray) [1]	170 – 190	2	25 – 40
Marble, nut cake (tin)	150 – 170	2	60 – 80
Fresh fruit cake, with filling (tray)	170 – 190	2	45 – 50
Fresh fruit cake (tray)	170 – 190	2	35 – 55
Fresh fruit cake (tin)	160 – 180	2	55 – 65
Flan base [2] [3]	170 – 190	2	20 – 25
Small cakes [2] [3] (tray)	170 – 190	3	15 – 25
Sponge mix [2] [3]			
Sponge cake (3 to 6 eggs) [2] [3]	170 – 190	3	20 – 35
Sponge cake (2 eggs) [2] [3]	170 – 190	3	15 – 20
Swiss roll [2] [3]	180 – 200	3	12 – 16
Rubbed in mixture			
Tart / flan base	170 – 190	2	15 – 20
Streusel cake	170 – 190	2	45 – 55
Small cakes[2] [3] (tray)	160 – 180	3	15 – 25
Cheesecake	170 – 190	2	70 – 90
Apple pie [2]	170 – 190	2	45 – 65
Apricot tart, with filling[2]	170 – 190	2	55 – 75
Swiss apple pie [2]	220 – 240	1	25 – 35
Yeast mixtures / quark dough			
To prove dough	30 – 50	Oven floor [4]	15 – 30
Guglhupf	160 – 180	1	50 – 60
Streusel cake	170 – 190	2 [5]	35 – 45
Fresh fruit cake (tray)	180 – 200	2 [5]	40 – 50
White bread	160 – 180	1	50 – 60
Wholegrain bread 2)	190 – 210	2	50 – 60
Pizza (tray) [2] [3]	190 – 210	1	30 – 40
Onion tart [2]	180 – 200	2	25 – 35
Apple turnvovers	160 – 180	2	25 – 30
Choux pastry [2] [3], Eclairs	180 – 200	3	35 – 45
Puff pastry [2]	190 – 210	2	15 – 25
Meringues[2], Macaroons	120 – 140	2	25 – 50

1) Unless otherwise stated, the times given are for an oven which has not been pre-heated. With a pre-heated oven, shorten times by up to 10 minutes.
2) Pre-heat the oven.
3) Switch Rapid Heat-up off during the heating-up phase.
4) Place the rack on the floor of the oven, and stand the bowl containing the dough on the rack.
5) Shelf level for yeast dough. For quark dough, use shelf level 3.

In general, if a range of temperatures/times is given, it is best to select a lower temperature and to check the food after the shortest time.

Intensive Bake

Particularly suitable for

- dishes that require a moist topping and crisp base like pizza and quiche lorraine.
- cakes with a filling where the base has not been pre-baked, e.g. some cheesecakes.

Cakes / biscuits	Temperature in °C	Recommended shelf level	Duration[1)] in min.
Creamed mixture			
Fresh fruit cake, with filling (tray)	150 – 170	2	30 – 35
Rubbed in mixture			
Cheesecake	150 – 170	2	65 – 75
Apple pie	150 – 170	2	50 – 60
Apricot tart, with filling	150 – 170	2	50 – 60
Swiss apple pie	190 – 210	1 or 2	25 – 30
Yeast mixtures / quark dough			
Pizza (tray) [2)]	170 – 190	2	40 – 50
Onion tart	170 – 190	2	25 – 35

1) Unless otherwise stated, the times given are for an oven which has not been pre-heated. With a pre-heated oven, shorten times by up to 10 minutes.

2) Switch Rapid Heat-up off during the heating-up phase.

In general, if a range of temperatures/times is given, it is best to select a lower temperature and to check the food after the shortest time.

Tips	Notes
Function Fan Plus	You can also use Conventional.
Crockery Any heat-resistant containers	The Miele Gourmet oven dish, roasting pans with a lid, ovenproof china or glass, roasting bags, the universal tray, the rack on top of the universal tray, the anti-splash insert in the universal tray. We recommend roasting in a covered pot as – this ensures that sufficient stock remains for making gravy, – and the oven stays cleaner, too.
Shelf level 2nd shelf level from the bottom	
Pre-heating Generally not required	Place the roasting pan on the rack into a cold oven. Exceptions: for roasting beef/fillet.
Temperature Please refer to the roasting chart.	– Do not select a higher temperature than suggested. The meat will brown on the outside, but will not be properly cooked through. – With Fan Plus, a temperature of 20 °C less than for Conventional is sufficient. – For cuts which weigh 3 kg or more, select a temperature approx. 10 °C lower than that given in the roasting chart. Roasting will take longer at the lower temperature, but will be more even. – For roasting directly on the rack, select a temperature that is about 20 °C lower than for roasting in a covered pot.
Roasting duration Please refer to the roasting chart.	To calculate the roasting time: The traditional method is to allow 15 to 20 minutes per 450 grams, according to type of meat, plus approx. 20 minutes, adjusting the length of time as roasting proceeds to obtain the required result. – Beef/Venison: 15–18 Min./cm – Pork/Veal/Lamb: 12–15 Min./cm – Roast beef/Fillet: 8–10 Min./cm

Useful tips

Browning

Browning only occurs towards the end of the roasting time. Remove the lid about halfway through the roasting time if a more intensive browning result is desired.

Standing time

At the end of the programme, take the roast out of the oven, wrap in aluminium foil and leave to stand for about 10 minutes. This helps retain juices when the meat is carved.

Roasting poultry

For a crisp finish, baste the poultry ten minutes before the end of cooking time with slightly salted water.

Frozen meat

Do not roast deep frozen meat. Meat should be thoroughly defrosted before roasting.

Food	Recom-mended shelf level	Fan Plus		Conventional [1)]	
		Temperature in °C [2)]	Time in min.[3)]	Temperature in °C [2)]	Time in min.[3)]
Topside of beef, approx. 1 kg	2	170 – 190	100 – 120	190 – 210	100 – 120
Beef fillet or roast beef, approx. 1 kg[4)]	2	190 – 210	45 – 55	200 – 220	45 – 55
Venison, approx. 1 kg	2	180 – 200	90 – 120	190 – 210	90 – 120
Pork joint, approx. 1 kg	2	170 – 190	100 – 120	200 – 220	100 – 120
Pork joint with crackling, approx. 2 kg	2	150 – 170	160 – 180	180 – 200	120 – 150
Gammon joint, approx. 1 kg	2	170 – 190	60 – 70	200 – 220	60 – 70
Meat loaf, approx. 1 kg	2	160 – 180	70 – 80	190 – 210	70 – 80
Veal, approx. 1.5 kg	2	170 – 190	100 – 120	190 – 210	100 – 120
Leg of lamb, approx. 1.5 kg	2	170 – 190	90 – 120	200 – 220	90 – 120
Rack of lamb, approx. 1.5 kg[4)]	2	170 – 190	50 – 60	190 – 210	50 – 60
Poultry, 0.8 – 1 kg	2	170 – 190	60 – 70	190 – 210	60 – 70
Poultry, approx. 2 kg	2	170 – 190	90 – 110	190 – 210	90 – 110
Poultry, stuffed, approx. 2 kg	2	170 – 190	110 – 130	190 – 210	110 – 130
Poultry, approx. 4 kg	2	160 – 180	150 – 180	180 – 200	150 – 180
Fish, whole, approx. 1.5 kg	2	160 – 180	35 – 55	190 – 210	35 – 55

1) We recommend Fan Plus for roasting, however, Conventional can also be used.
2) Temperature in a covered pot.
If open roasting, set the temperatures 20 °C lower.
3) Unless otherwise stated, the times given are calculated on the basis of an oven which has not been pre-heated.
4) Pre-heat the oven.

In general, if a range of temperatures and times is given, it is best to select a temperature in the middle and to check the food after the shortest time.

Notes on low temperature cooking

Cooking at low temperatures is ideal for cooking beef, pork, veal or lamb when a particularly tender result is required.

First the meat needs to be seared all over briefly at a high temperature on the cooktop in order to seal it.

By using a low temperature together with a long cooking duration, meat will be cooked to perfection and be very tender. The meat is allowed to relax again. The meat juices inside the joint start to circulate evenly throughout the meat to reach the outer layers.

This leads to very tender and succulent results.

Please note:

- Use lean meat which has been correctly hung and trimmed. Bones should be removed before cooking.
- For searing, use a suitable cooking oil that can withstand high temperatures.
- Do not cover meat during cooking.
- Cooking takes between 2-4 hours depending on the size and amount of meat and on the degree of doneness and browning required.
- The meat can be carved immediately. It does not need to rest.

Procedure for low temperature cooking

Use a rack and the universal tray.

- Place the rack and universal tray on the second shelf.
- Select Conventional Heat ⊟.
- Pre-heat the oven including the rack and the the universal tray at 130 °C for approximately 15 minutes.
- Whilst the oven is pre-heating, sear the meat thoroughly on the cooktop.

Cooking times and core temperatures can be found in the table if you have a manual food probe.

⚠ Danger of burning!
The top heating element/grill element is hot.

- Place the meat on the rack.
- Insert a food probe, if available, into the meat.
- Reduce the temperature to 100 °C.
- Cooking the meat.

It is a good idea to programme the duration of the cooking programme. See "Entering a cooking duration". The cooking result won't be affected if the meat is left in the oven after the finish of the programme.

Cooking times/Core temperatures

Food	Time in min.	Core tempera-ture in °C
Roast beef		
– rare	60–90	55–60
– medium	120–150	65-70
– well done	180–240	70-75
Pork fillet	120–150	65-80
Gammon*	150–210	75-80
Saddle of veal*	180–210	65-75
Saddle of lamb*	90–120	65-75

* no bones

Note:
Cooking times will vary depending on size, weight and the shape of the cut of meat.

Useful tips

Because it has been cooked using low temperatures

- meat can be kept warm quite safely in the oven until it is served. This will not affect results in any way.
- The meat is at an ideal temperature to be eaten straight away. Serve on pre-heated plates with very hot sauce or gravy to prevent it cooling down too quickly.

Grilling tips

⚠ Danger of burning!
Grill with the oven door closed.
If you grill with the door open, hot air will escape from the oven instead of being cooled by the cooling fan. The controls will get hot.

Functions	Notes
Grill 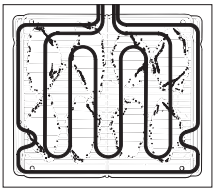	For grilling thin cuts in large quantities and for browning large baked dishes. The whole grill element will get hot and glow red.
Economy Grill 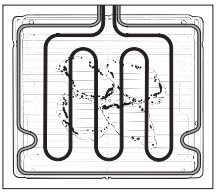	For grilling thin cuts in small quantities and for browning small baked dishes. The inner part of the grill heating element will get hot and glow red.
Fan Grill	For grilling thicker items, e.g. rolled meat, poultry pieces.

Tips	Notes
Containers Rack on the universal tray Anti-splash insert in the universal tray	Do not use the baking tray.
Shelf level from the bottom Please refer to the grilling chart	– For thin cuts, use shelf level 4 or 5 – For thicker cuts, use shelf level 3 or 4
Pre-heating The grill has to be pre-heated.	Pre-heat the grill for approx. 5 minutes with the door shut.
Temperature Please refer to the Fan Grilling Guide	– For thin cuts of meat (e. g. chops or steak): ▾▾▾ – For grilling thicker items, (e. g. rolled meat, poultry): 240 °C – Do not select a higher temperature than suggested. The meat will brown on the outside, but will not be properly cooked through.
Grilling duration Please refer to the Fan Grilling Guide	– Flat pieces of fish and meat usually take 6–8 minutes per side. Thicker pieces take a little longer. It is best to grill food of a similar thickness at the same time so that the grilling time for each item does not vary too greatly. – With rolled meat, allow approx. 10 minutes per cm diameter. – Turn food half-way through cooking.

Preparing food for grilling

Rinse the meat briefly under running cold water, pat dry. Do not season meat with salt before grilling as this draws the juices out.

Add a little oil to lean meat if necessary. Do not use other types of fat as they can burn and cause smoke.

Clean fish in the normal way. To enhance the flavour, add a little salt or squeeze a little lemon juice over the fish.

Grilling

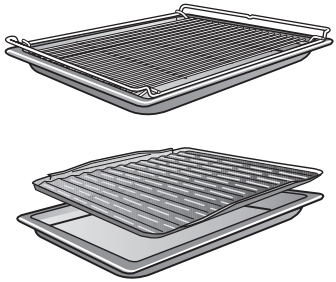

- Assemble the rack and anti-splash insert on the universal tray as illustrated.
- Place the food on the rack.
- Select the required function and set the temperature.
- Pre-heat the grill for approx. 5 minutes with the door shut.
- Place the food under the grill and shut the door.
- Turn food half-way through cooking.

Useful tips

To grill thicker pieces of food more gradually after an initial high temperature, continue grilling at a lower temperature setting or use a lower shelf runner to allow the food to cook through to the centre.

One way of finding out how far through a piece of meat has been cooked is to press down on it with a spoon.

– If there is very little resistance to the pressure of the spoon, it will still be red on the inside ("rare").
– If there is some resistance, the inside will be pink ("medium").
– If there is great resistance, it is thoroughly cooked through ("well done").

Fan Grilling guide (Fan Grill)

- Use the Fan Grill function for meat, fish, poultry and vegetables.
- Always pre-heat for at least 5 minutes before Fan Grilling.
- It is not necessary to turn food when Fan Grilling.
- The door must be closed during Fan Grilling.
- When using red meat, pat the meat dry before Fan Grilling as this encourages a richer colour.
- Note: all temperatures are approximations and must be varied according to the thickness and preparation of the meat. The chart below is a suggested guide only. Personal taste and size of serves will vary times and temperatures. We recommend you monitor cooking results for best outcomes.

Food	Temperature in °C	Shelf level	Total grilling time in min.[1)]
Lean thin sausages	180-190	4	8-10
Thick sausages	180	4	15-20
Lean beef fillet steak	220	5	6-12
Chicken breast fillet, plain or a dry marinade	200	4	14-18
Chicken breast fillet, with a wet marinade	200	3	14-18
Whole butterflied chicken	200	5	35-40
Thin white fish fillets	220	4	6-10
Thick fish fillets, cutlets or steaks (on anti-splash insert placed in the universal tray)	200	4	10-15
Oily fish (on anti-splash insert placed in the universal tray)	200	4	8-12
Lamb loin chops	190	4	12-16
Lamb back straps	220	5	8-10
Vegetables, capsicum, zucchini, sweet potato, eggplant	200	5	12-15
Potato wedges or small roast potatoes	220	3	20-25
Kebabs and satays (red meat)	200	5	12-15
Chicken satays	200	4	12-15

Fan Grilling can be used for small roasts but is only recommended for lean, tender cuts of meat, eg lamb racks, rump roasts, and beef fillet. Fan Grill the roast at 180 - 200 °C on shelf level 3, depending on thickness.

Grilling guide (Grill / Economy Grill)

- Use for thick toasts, muffins, cheese on toast, foccacia, bruschetta and bacon.
- Pre-heat grill for at least 5 minutes on 200 °C - 220 °C.
- Select the appropriate shelf level for the thickness of the food.
- Thinner foods can be positioned on shelf 5, while thicker foods should be grilled on shelf 4.
- Grill until food is golden brown and crispy.
- Door must be closed for grilling.

The Defrost function uses the fan to circulate air at room temperature.

Please note:

- Where possible, remove the packaging and put the food to be defrosted on the universal tray or into a suitable dish.
- When defrosting poultry, put it on the rack over the universal tray to catch the defrosted liquid so that the meat is not lying in this liquid.

⚠ It is particularly important to observe food hygiene rules when defrosting poultry. Do not use the liquid from the defrosted poultry. Pour it away, and wash the tray, the sink and your hands. Danger of salmonella poisoning!

- Fish does not need to be fully defrosted before cooking. Defrost so that the surface is sufficiently soft to take herbs and seasoning. Do not refreeze food once it has thawed.

Defrosting times

The time needed for defrosting depends on the type and weight of the food, and at what temperature it was deep frozen. The following chart is for guidance only. It is important to check that food is thoroughly defrosted.

Food	Weight	Time in min.
Chicken	800 g	90–120
Meat	500 g	60–90
	1000 g	90–120
Sausages	500 g	30–50
Fish	1000 g	60–90
Strawberries	300 g	30–40
Butter cake	500 g	20–30
Bread	500 g	30–50

Bottling

We recommend using Fan Plus.

Containers for bottling

– Jars for bottling

– Jars with twist-off lids. Only use special jars for bottling.

⚠ Do not use tins.

6 jars [1] (1 l content)	**Temperature**	**Time from simmering point**[2), 3)] **in min.**	**Residual heat time in min.**
Fruit, cucumbers	150 – 170 °C until boiling. Then select "Lighting".	None	25 – 30
Asparagus, carrots	150 – 170 °C until simmering. Then continue cooking at 100 °C.	60 – 90	25 – 30
Peas, beans		90 – 120	25 – 30

1) Insert universal tray in lowest shelf level and place jars on top.
2) Simmering = consistent rising of bubbles
3) Reduce the temperature at the same time to avoid the produce boiling over.

After bottling

Take the jars from the oven, and leave to set for approx. 24 h. Cover the jars with a clean tea towel.
Make sure all jars are closed properly when storing them.

We recommend using Fan plus .

- Select the required function and set the temperature.
- When the temperature indicator light goes out, place the dish in the pre-heated oven.

Cook frozen desserts and pizza on baking paper on the rack rather than on the baking tray or the universal tray. Cooking large frozen items on the baking tray or the universal tray can cause the metal to distort. This distortion will increase with each subsequent use.
Frozen food such as oven chips or croquette potatoes can, however, be cooked on the baking tray or the universal tray.

Examples of ready meals

Food	Temperature in °C *	Shelf level from the bottom*	Time in min.*	Notes
Potato, pasta or vegetable bake	250	2	20 – 25	Place in a suitable dish
Lasagne, cannelloni	190	2	35 – 40	Remove the packaging
Filled baguette, panini	200	2	12 – 15	Place on baking paper, directly on the rack
Pre-cooked pizza	200	2	12 – 20	Place on baking paper, directly on the rack
Pre-cooked mini pizza	220	2	8 – 10	Place on baking paper, directly on the rack
Potato pancakes, Rösti, croquettes	220	2	12 – 20	Place on baking paper, directly on the rack
Pretzels	220	2	12 – 15	Place on baking paper, directly on the rack

* Observe recommended temperatures, cooking times and position in the oven given on the manufacturer's packaging.

Miele branded cleaning and conditioning products are available from Miele.

⚠ Do not use a steam cleaner to clean the appliance. The steam could reach electrical components and cause a short circuit.

Appliance front

Remove any soiling immediately.
If not, it might become impossible to remove and could cause the surface to alter or discolour.

Clean the front using a damp microfibre cloth or with a clean sponge and a solution of hot water and washing-up liquid. Wipe the surfaces dry using a soft cloth.

The external surfaces of this appliance are all susceptible to scratching. Scratches on glass surfaces could even cause a breakage in certain circumstances. Contact with unsuitable cleaning agents can alter or discolour the external surfaces.

Avoid damage to the surface. To prevent damage to your appliance when cleaning, do not use:

- Cleaning agents containing soda, ammonia, acids or chlorides
- Cleaning agents containing descaling agents
- Abrasive cleaning agents, e.g. powder cleaners and cream cleaners
- Solvent-based cleaning agents
- Stainless steel cleaners
- Dishwasher detergent
- Oven sprays
- Glass cleaning agents
- Hard, abrasive sponges and brushes, e.g. pot scourers
- Dirt erasers
- Sharp metal scrapers

Accessories

Baking tray, universal tray, anti-splash insert

(depending on model)

The surface has been treated with **PerfectClean**.

Please refer to the section on "PerfectClean" for information on cleaning and care.

Rack, runners

Use warm water and washing-up liquid or a non-abrasive stainless steel cleaning agent to clean the chrome-plated surface.

FlexiClip telescopic runners

(depending on model)

Do not clean FlexiClip telescopic runners in a dishwasher. This would remove the special lubricant.

To prevent damage to your appliance when cleaning, do not use:

- Abrasive cleaning agents, e.g. powder cleaners and cream cleaners
- Stainless steel cleaners
- Hard, abrasive sponges and brushes, e.g. pot scourers

When cleaning the runners, be very careful not to wash out the special lubricant in them.

Avoid frequent:

- soaking in hot soapy water,
- cleaning of the bearings.

FlexiClip telescopic runners are best cleaned after each use.
This prevents soiling drying on or being burnt on when the oven is used again.

If the oven is used frequently without being cleaned, it may become very difficult or even impossible to get clean again.

– **Normal soiling**

  Clean the front using a damp microfibre cloth or with a clean sponge and a solution of hot water and washing-up liquid. Wipe the surfaces dry using a soft cloth.

– **Heavy soiling**

  If necessary, the reverse of a non-scratching washing-up sponge can be used. Cleaning is made easier if soiling is first dampened with a solution of washing-up liquid.
  For very heavy soiling, the telescopic runners can be soaked in a solution of hot water and washing-up liquid for a maximum of 10 minutes.

The runners may appear discoloured or a lighter colour in places after they have been cleaned. This will not affect the functioning of the runners in any way.

Note:

When baking cakes with moist toppings or fillings e.g. fruit crumble, be careful not to let them spill over. Should this happen there is a danger of sticky fruit juices adhering to the runners and hindering or even preventing their movement in and out of the oven.
Clean the runners as described above and very carefully use a soft nylon brush to clean the bearings inside the runners.

Lubricating the FlexiClip telescopic runners

If the lubrication on the telescopic runners dries out, they can be relubricated to ensure they continue to run smoothly.

A special lubricant is available from Miele.

Only use this special lubricant, as it is designed to withstand high temperatures in the oven.
Other lubricants can harden and stick to the telescopic runners when they are heated.

Oven interior

⚠ Danger of burning.
Allow the oven to cool down before cleaning by hand.

It is best to clean the oven interior each time the oven is used. If this is not done, subsequent soiling from baking and roasting will become worse and make cleaning harder. In extreme cases this can cause damage to the surface material.

The enamelled **oven interior** has been treated with **PerfectClean**.
Please refer to the section on "PerfectClean" for information on cleaning and care.

Due to the bright grey colour of the enamel, the oven interior appears very light and provides an optimal view of the food.
Moreover, any soiling can be easily spotted and removed after cooking.

The **back panel** is coated with dark grey **catalytic enamel**.
See "Cleaning and care" for information on cleaning catalytic enamelled panels.

To make cleaning easier,
- remove the oven door,
- dismantle the door,
- remove the FlexiClip runners (if available)
- take out the side runners,
- remove the catalytic enamelled back panel,
- lower the top heating/grill element.

Instructions for doing this are given further on in this section.

Seal and inside of the oven door

Grease desposits on the seal between the inside of the oven door and the oven interior can cause it to become brittle and cracked.

It is best to clean the seal and the inside of the door after each programme with a cloth or a clean sponge and a solution of hot water with a little washing up liquid. Wipe dry using a soft cloth.

PerfectClean

PerfectClean treated surfaces

- Oven interior
- Baking tray (if available)
- Universal tray
- Anti-splash insert (if available)

This surface has very good **anti-stick properties** and is much **easier to keep clean** than conventional oven enamel, if cleaned regularly.

Food can be taken off it more easily, and soiling from baking and roasting is easier to remove.

The following notes on **cleaning and care** should ensure that the anti-stick and easy clean properties of PerfectClean last for many years.

PerfectClean surfaces can be treated as you would treat glass.
Food can be sliced or cut up on the PerfectClean surface in the same way as on a baking tray with conventional enamel.

Do not use a ceramic knife on PerfectClean surfaces as it could cause scratching.

⚠ Allow the oven to cool down before cleaning by hand.
Danger of burning!

For **optimum performance** of PerfectClean enamel, it is important to clean the oven and accessories after each use.
The surfaces will become harder to clean and the anti-stick properties will deteriorate if soiling is not removed after each use and allowed to build up. In extreme cases cleaning may become impossible.

The following cause lasting damage to the surface structure and reduce the anti-stick effect and must not be used on PerfectClean surfaces:

- Abrasive cleaning agents, e.g. powder cleaners and cream cleaners,
- Cleaning agents for ceramic cooktops,
- Steel wool or metal scourers,
- Abrasive sponges, e.g. pot scourers or sponges which have been previously used with abrasive cleaning agents,
- Oven spray must not be used in a hot oven or left on for too long,
- PerfectClean enamelled items must not be washed in a dishwasher,
- Selective cleaning with mechanical cleaning agents.

Remove any residual cleaning agents with clean water as these will also hinder the anti-stick effect.

Normal soiling

Clean as soon as possible after each use with a dishcloth, soft sponge or a soft nylon brush, and a solution of hot water and a little washing-up liquid.
If necessary, the reverse of a non-scratching washing-up sponge can be used.
Cleaning is made easier if soiling is first dampened with a solution of washing-up liquid.

Stubborn soiling

Remove the catalytic back panel before using oven spray. The chemicals used in oven sprays will damage catalytic enamel, rendering it ineffective.

Allow the PerfectClean surfaces to cool down to room temperature before cleaning. Apply a proprietary oven cleaning spray (such as the Original Miele oven cleaner) and leave to take effect for approx. ten minutes.
When using the Original Miele oven cleaner, the time stated on the packaging can be slightly extended if needed.
If necessary, the scouring pad on the back of a non-scratching washing-up sponge or a soft nylon brush can be used to loosen the soiling.

Repeat the process if necessary.

After cleaning, rinse thoroughly with clean water and then dry thoroughly.

Stubborn soiling, e.g. from roasting, may need to be soaked first with a damp sponge to loosen it and, if necessary, a non-abrasive stainless steel spiral pad or a scraper suitable for glass can be used to remove it.

These cleaning tips will help to ensure that the surface is cleaned thoroughly.

Should the PerfectClean surface be damaged by any of the above measures not being heeded, it will still retain the anti-stick qualities of standard enamel and be as easy to keep clean as standard enamel.

Note:

– Soiling such as spilt juices and cake mixtures is best removed whilst the oven or tray is still warm. Exercise caution, make sure the oven is not too hot - danger of burning.

– Spilt fruit juices or roasting residues may cause lasting discolouration to the surfaces and can cause matt areas to appear.
  This discolouration is permanent but will not affect the efficiency of the enamel. Clean these following the instructions given above and do not use force to remove them.

Catalytic enamel surfaces

The back panel is coated with dark grey catalytic enamel.
Soiling from oil and fat is burnt off this surface when very high temperatures are used in the oven. The higher the temperature, the more effective the process.

> The catalytic coating becomes ineffective through using
> – abrasive cleaning agents,
> – hard brushes or abrasive sponges,
> – oven sprays.
> Remove the catalytic back panel from the oven before cleaning the PerfectClean oven surfaces with oven spray.

Note that deposits of **spices, syrups and similar substances** are not removed from the catalytic coating by this process. These should be removed by hand whilst still fresh, using a mild solution of hot water and washing-up liquid applied with a soft sponge or brush. Remove the back panel from the oven to do this.

Soiling caused by **oil and grease splashes** are removed from catalytic coated surfaces when the oven is heated to a high temperature. To do this:

- Take all accessories out of the oven.
- Wipe large deposits of soiling from the oven interior and the inside of the door before starting the cleaning process to avoid them baking onto PerfectClean surfaces and becoming impossible to remove.
- Select Fan Plus [⅄].
- Set the highest temperature setting.

Run the oven for approx. 1 hour. The length of time will depend on the level of soiling.

The timer can also be used to set the finish time. See "Entering a cooking duration".

> If the catalytic coated back panel is very heavily soiled with oil and grease, a film will develop on the oven surface during the cleaning process which can be wiped off with warm water and a little washing-up liquid once cool.

- Finally, clean the PerfectClean surfaces and the inside of the door.

Any remaining soiling will gradually disappear with each subsequent use of the oven at high temperatures.

> Should the catalytic coating on the back panel become ineffective through improper use or heavy soiling, a replacement can be obtained from your Miele Chartered Agent or Miele.

To remove the oven door

The oven door is connected to the oven by hinges.

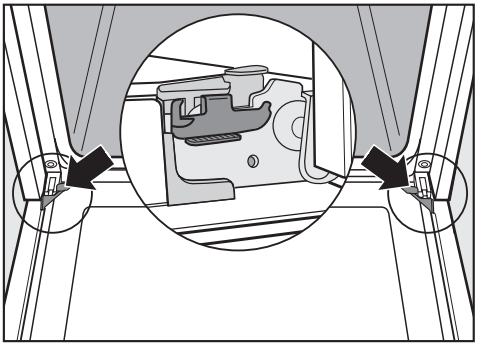

Before removing the door, the locking clamps on both hinges have to be released.

- Open the door fully.

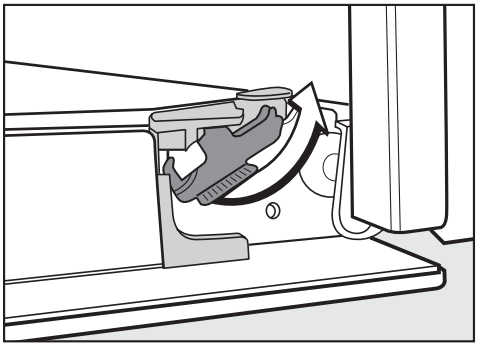

- To release the locking clamps on the hinges, turn them upwards as far as they will go until they are at an angle.
- Then lift the door upwards as far as it will go.

Never attempt to pull the door off the hinge guides from a horizontal position. The hinges can flip back and cause damage to the appliance. Danger of injury!

- Hold the door securely at both sides and lift upwards off the hinge guides.

The door should be gripped firmly at the sides and not at the handle when being removed. The handle could break off and damage the door.

Make sure that you lift the door off evenly on both sides.

To dismantle the oven door

The oven door is made up of two panes of glass and has vents at the top and bottom.

When the oven is operating, air is circulated through the door to keep the outer pane cool.

If condensate has worked its way in between the glass panes, the door can be dismantled in order to clean in between the panes.

Clean the glass in the same way as you would clean the appliance front.

Do not use abrasive cleaners, hard sponges, brushes or sharp metal tools to clean glass as these can scratch the surface. Scratches can cause the glass to break.

Do not use an oven spray. This will damage the surface of the aluminium surrounds.

Ensure that the glass panels are inserted the correct way round after cleaning, as each side of the pane has a different coating. Those facing the oven interior reflect the heat.

To avoid the risk of breakage, it is advisable to place the panes on a table protected by a soft cloth (e.g. a towel).

Always remove the oven door before dismantling it.

- Place the door on a protective surface (e.g. on a table cloth) to prevent it getting scratched. The door handle should line up with the edge of the table. Make sure the glass lies flat and does not get broken during cleaning.

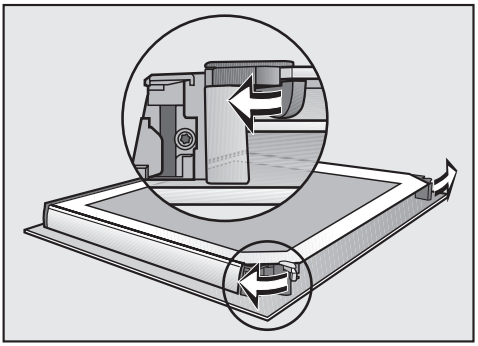

- Flip the glass pane retainers outwards to open them.

You can now remove the inner panes.

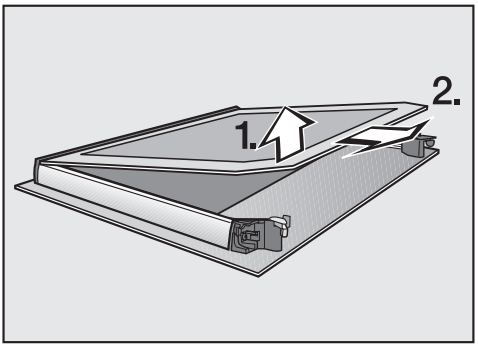

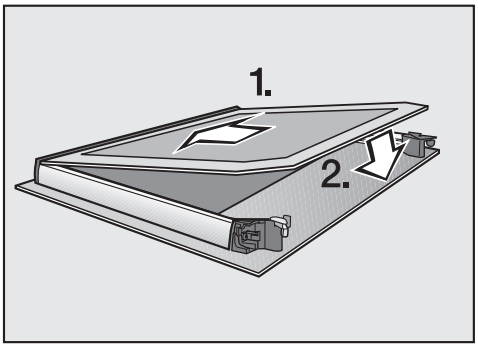

- **Gently** lift the inner pane up and out of the plastic strip.
- Clean the glass panes and other parts with a damp microfibre cloth or a clean sponge and a solution of hot water with a little washing-up liquid. Wipe dry using a soft cloth.
- To reassemble the door:
- Push the inner pane into the plastic strip and place it between the retainers.
  "Miele" must be visible at the top.

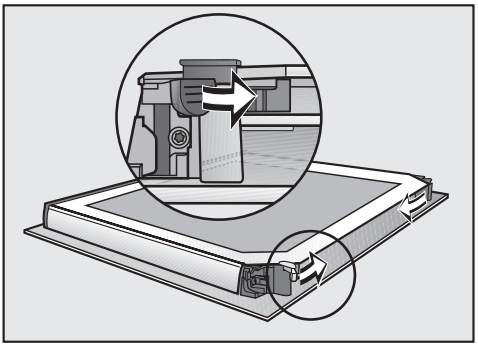

- Flip the glass pane retainers inwards to close them.

To refit the door

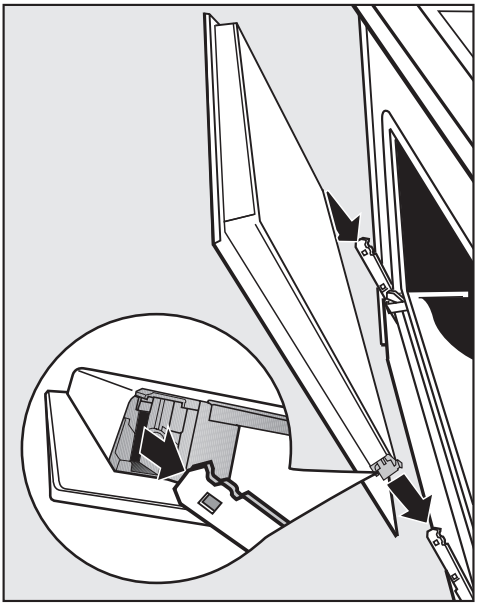

- Hold the door securely at both sides and carefully fit it back onto the hinge guides.

Make sure that the door goes back on straight.

- Open the door fully.

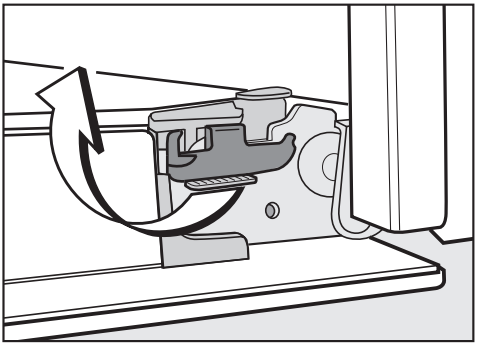

- Flip both locking clamps back up as far as they will go into a horizontal position.

It is essential that the locking clamps are flipped down when the door is refitted after cleaning. Otherwise, on closing the door, the hinges could work loose from the guide holes and this could result in damage to the door.

To remove the FlexiClip telescopic runners

⚠ Danger of burning
The oven interior needs to have cooled down before you start handling anything inside it.

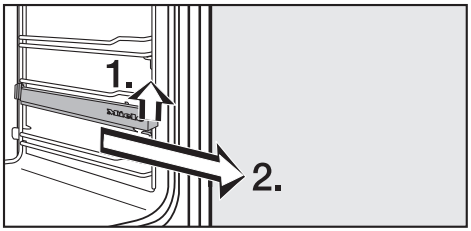

- Lift the FlexiClip runner up at the front and pull it out along the shelf runner.

Refit the runners carefully as described in "Features".

To remove the shelf runners

⚠ Danger of burning
The oven interior needs to have cooled down before you start handling anything inside it.

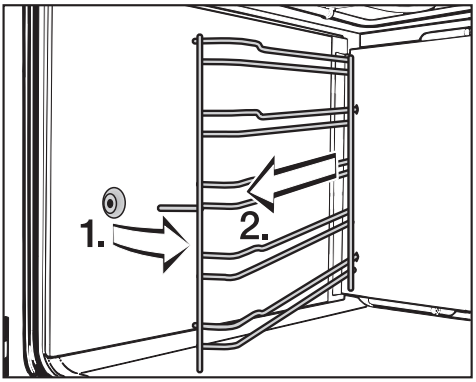

- Pull the runners forwards out of the holder and remove.

Reassemble in the reverse order, carefully ensuring all parts are correctly in place.

To remove the back panel

⚠ Danger of burning
The oven interior needs to have cooled down before you start handling anything inside it.

The back panel can be removed for cleaning if necessary.

See "Cleaning and care" for information on cleaning catalytic enamelled panels.

- Remove the runners.
- Loosen the screws in the back panel and take it out.

The oven must not be used without the back panel fitted. This could cause considerable injury.

Reassemble in the reverse order, carefully ensuring all parts are correctly in place.

To lower the top heat/grill element

⚠ Danger of burning
The oven interior needs to have cooled down before you start handling anything inside it.

- Remove the runners.

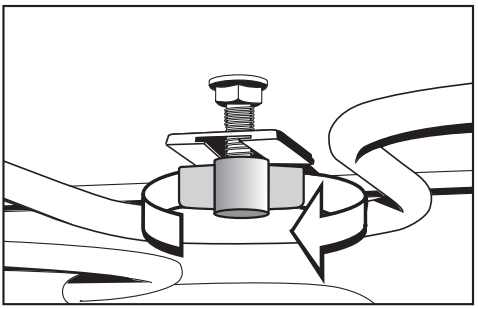

- Unscrew the wing nut. Gently lower the element.

Do not use force! This can damage the element.

Reassemble in the reverse order, carefully ensuring all parts are correctly in place.

Make sure that the wing nut is screwed back on properly.

With the aid of the following guide, minor problems can be easily corrected without contacting Miele.
If you can't remedy the problem yourself, please call Miele (see back cover for details).

Please note that a call-out charge will be applied for unnecessary service visits where the problem could have been rectified as described in these Operating instructions.

On no account open the appliance housing!

Installation, maintenance and repairs may only be carried out by a suitably qualified and competent person in strict accordance with current national and local safety regulations.
Repairs and other work by unqualified persons could be dangerous. The manufacturer cannot be held liable for unauthorised work. Ensure current is not supplied until after maintenance or repair work has been carried out

Problem	Possible cause and remedy
The display is dark.	■ Check whether the mains fuse has tripped. If it has not, contact a qualified electrician or Miele.
The oven does not heat up.	■ Check whether a function **and** a temperature have been set. ■ Check whether the mains fuse has tripped. If it has not, contact a qualified electrician or Miele.
0:00 is flashing in the display on ovens with a clock timer.	All pre-set times have been lost due to power cut. ■ Reset the time of day. ■ Reset user programmes.
A noise can be heard after a cooking programme.	The cooling fan continues to run for a while after the oven has been switched off to prevent any humidity building up in the oven, on the control panel or on the oven housing unit. When the temperature has fallen sufficiently, the fan switches off automatically.

Problem	Possible cause and remedy
The oven lighting doesn't work. 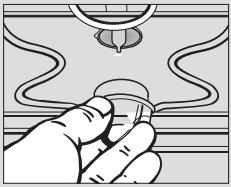	■ Disconnect the appliance from the electricity supply. Switch off and unplug at the socket, or remove the fuse, or switch off at the isolator as appropriate. ■ Unscrew the lamp cover with a quarter-turn to the left and then pull downward from the housing. ■ When purchasing a new lamp, take the old one with you to make sure you obtain the correct replacement (Osram 66725 AM/A, 230 V, 25 W, G9). ■ Replace the lamp cover and tighten with a turn to the right. ■ Connect the appliance to the electricity supply.
Cakes and biscuits are not cooked properly after following the times given in the chart.	■ Check that the correct temperature has been set. ■ Check if you have amended the recipe. The addition of more liquids or more eggs makes a moister mix which would require a longer baking time.
Browning is uneven.	There will always be a slight unevenness. ■ If browning is very uneven, check whether the temperature was set too high, or whether the correct shelf level was used. With Conventional check the colour and material of the baking tins being used. Light-coloured, shiny, or thin-walled tins are less suitable.
There are spots like rust on the catalytic surfaces.	When roasting on the rack, the circulating air sometimes picks up spices, which are then deposited on the oven interior walls. These residues are not removed by catalytic cleaning, and should be removed while fresh with a mild solution of hot water and washing-up liquid applied with a soft brush.

After sales service

In the event of any faults which you cannot remedy yourself, please contact

– your Miele Chartered Agent

or

– Miele.

You will find the contact details for Miele on the back cover of this manual.

When contacting Miele, please quote the model and serial number of your appliance.

These are given on the data plate which is located on the front of the oven cavity.

Warranty

The warranty for this appliance is 2 years.

For further information, please refer to your warranty booklet.

Optional accessories

The following accessories may come as standard with some models.
They are also available to order from Miele or your Miele Chartered Agent.

FlexiClip telescopic runners

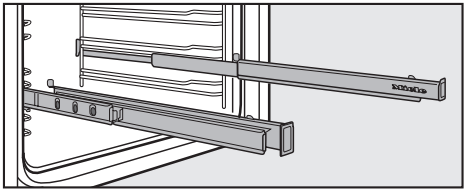

Up to five pairs of FlexiClip telescopic runners can be installed in the oven.

Baking tray, universal tray and rack

These items, supplied with your oven, are also available to order.

When ordering, please quote the model number of your oven.

Handle

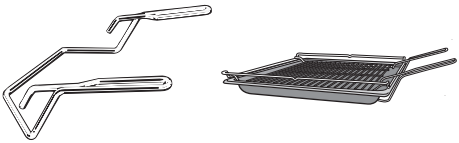

The handle makes it easier to take the universal tray, baking tray and rack out of the oven, or to put them into it. The two prongs at the top go inside the tray or above the rack, and the U-shaped supports underneath.

Pizza stone

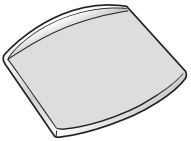

The pizza stone is ideal for items which need a well-baked base such as pizza, quiche, bread, bread rolls and savoury snacks.
The pizza stone is made from heat retaining fire brick and is glazed.
Place it directly on the rack.
A paddle made of untreated wood is supplied with it for placing food on the pizza stone and taking it off.

Pizza dish

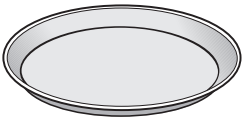

This circular pan is suitable for cooking pizzas, flat cakes made with yeast or whisked mixtures, sweet and savoury tarts, baked desserts, and can also be used for frozen cakes and pizzas.

The surface has been refined as PerfectClean enamel.

Gourmet oven dish

The gourmet oven dish can be placed in the oven directly on the shelf runners. It has non-tip safety notches like the universal tray to prevent it being pulled out too far.
It has an anti-stick coating.

It is available in two sizes:

– HUB 5000-M (internal dimensions 38 x 22 x 8 cm)

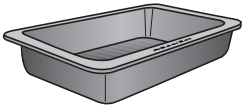

– HUB 5000-XL (internal dimensions 38 x 35 x 8 cm)

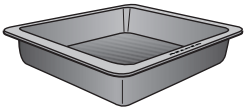

Gourmet oven dish lid

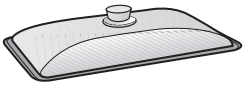

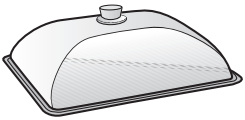

A lid is available separately.

When ordering a lid, please specify the gourmet oven dish it is to be used with (HUB 5000-M or XL).

Catalytic enamelled side walls and ceiling panel

The side walls are installed behind the shelf runners and protect the interior walls against soiling.
The ceiling panel is installed above the top heating/grill element.
When ordering, please quote the model number of your oven.

Original Miele all-purpose microfibre cloth

Light soiling and fingerprints can be easily removed with the microfibre cloth.

Original Miele oven cleaner

Suitable for removing stubborn soiling. It is not necessary to pre-heat the oven beforehand.

All electrical work should be undertaken by a suitably qualified and competent person in strict accordance with current national and local safety regulations. Installation, repairs and other work by unqualified persons could be dangerous. The manufacturer cannot be held liable for unauthorised work.
Ensure power is not supplied to the appliance until after installation or repair work has been carried out.

The **voltage and rated load** are given on the data plate, visible below the oven interior, with the door open. Ensure that these match the household mains supply. Please quote this data, and the model and serial number when contacting Miele.

Connection of this appliance should be made via a fused connection unit or a suitable isolator, which complies with national and local safety regulations, and the on/off switch should be easily accessible after the appliance has been built in.

If the switch is not accessible after installation (depending on country) an additional means of disconnection must be provided for all poles.

For extra safety, it is advisable to install a residual current device (RCD). Please contact a qualified electrician for advice.

Important

The appliance is supplied for connection to a 230 V, 50 Hz electricity supply.

The wires in the mains lead are coloured in accordance with the following code:

Green/yellow = earth

Blue = neutral

Brown = live

WARNING
THIS APPLIANCE MUST BE EARTHED

When replacing the cable supplied with another cable or changing the connection, only cable type H 05 VV-F or H 05 RR-F with a suitable cross-sectional area (CSA) may be used (available from Miele).

Test marks . . . . . Electrical safety
. . . . . C-Tick Mark

Electrically suppressed
according to. . . . . AS/NZS 1044

Dimensions are given in "mm".

Appliance dimensions and unit cut-out

Installation in a base unit

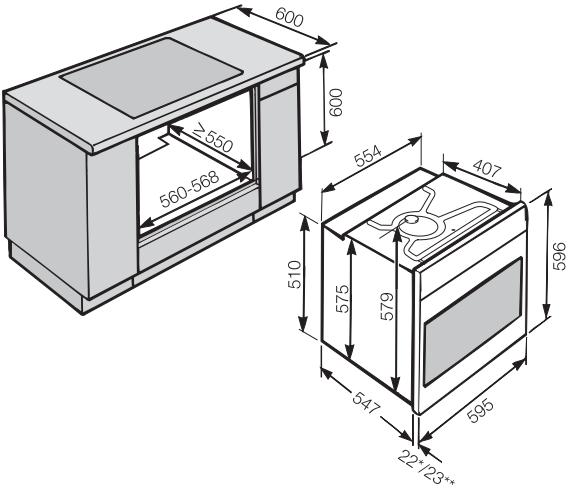

Installation in a tall unit

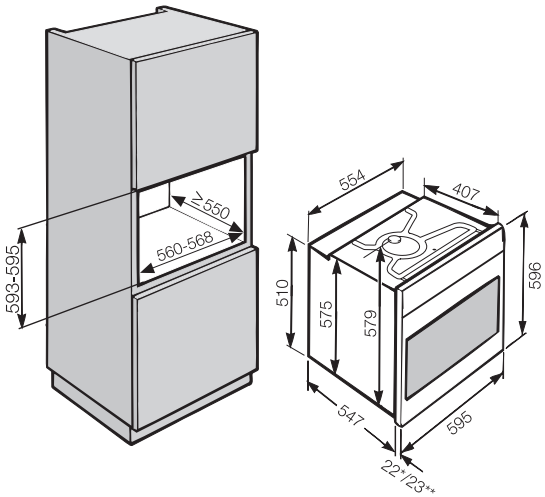

* Appliances with glass front
** Appliances with metal front

Front dimensions

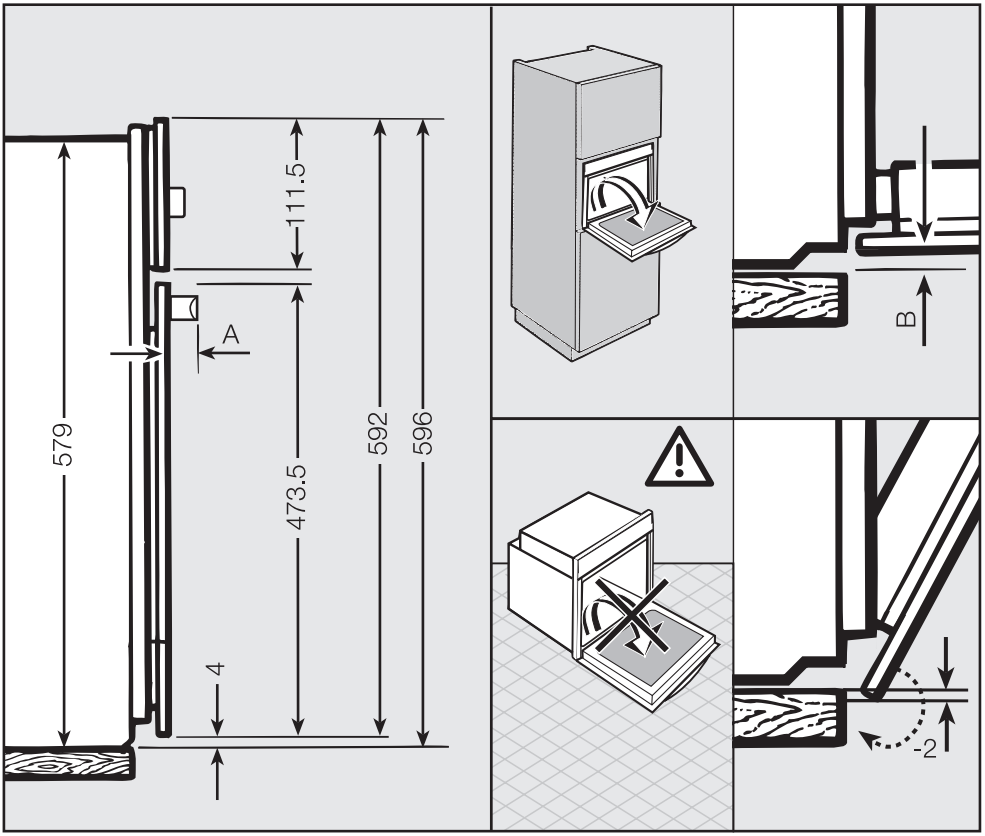

A H 4700, H 4710: 53.2
H 4800, H 4810: 47.5

B Appliances with glass front: 2.2
Appliances with metal front: 1.2

⚠ The appliance must not be operated until it has been correctly installed in its housing unit. Otherwise it poses an electric shock hazard.

Important. Do not fit insulation material inside the housing unit. This would hinder the intake of air to the appliance.

When installing the appliance, do not lift it up by the door handle as this can damage the door.

Turn off the mains electricity supply to the isolator.

- Connect the mains cable from the oven to the isolator.
- Push the appliance into the oven housing unit and align it.

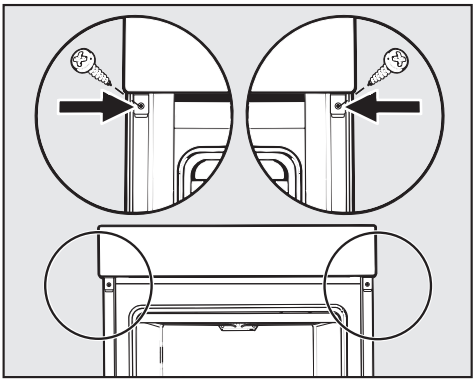

- Open the oven door and, using two screws, secure it to the side walls of the housing unit through the holes in the oven trim.

Miele

Miele Australia Pty. Ltd.
ABN 96 005 635 398
Melbourne:
1 Gilbert Park Drive
Knoxfield, VIC 3180
Telephone: (03) 9764 7130
Fax: (03) 9764 7149
Sydney:
3 Skyline Place
Frenchs Forest, NSW 2086
Telephone: (02) 8977 4230
Fax: (02) 8977 4249
Brisbane:
39 Harvey Street North
Eagle Farm, QLD 4009
Telephone: 1800 798 578
Fax: 1800 799 578
Adelaide:
83-85 Sir Donald Bradman Drive
Hilton, SA 5033
Telephone: 1800 018 770
Fax: 1800 799 578
Perth:
205-207 Stirling Highway
Claremont, WA 6010
Telephone: 1800 094 872
Fax: 1800 799 578

www.miele.com.au

Miele New Zealand Limited
Unit L, 10-20 Sylvia Park Road
Mt. Wellington, 1060, Auckland
New Zealand
Telephone: 0800 264 353
Fax: 0800 463 453
www.miele.co.nz

Germany
Miele & Cie. KG
Carl-Miele-Straße 29
33332 Gütersloh

Alteration rights reserved / 22 / 4111

M.-Nr. 07 856 420 / 05

(H 4700 B; H 4710 B; H 4800 B; H 4810 B)

CE